Endicott Research Group, Inc.
2601 Wayne St., Endicott, NY 13760
607-754-9187 Fax 607-754-9255
http://www.ergpower.com

SFDEB3995F

RoHS Compliant

Specifications and Applications Information

03/23/11

Smart Force LED Driver

The ERG *Smart Force Series* of LED Drivers are specifically designed for applications which require wide dimming and LCD brightness stability over a wide input voltage range. The SFDEB3995F is designed to provide backlight power for the AU Optronics G150XG01 V2 display.

Designed, manufactured and supported within the USA, the SFDE features:

- ✓ 8 mm or less in height
- ✓ Wide input voltage range
- ✓ Constant LED current
- ✓ External dimming
- ✓ High dimming ratio
- ✓ Soft start
- ✓ One year warranty

Package Configuration

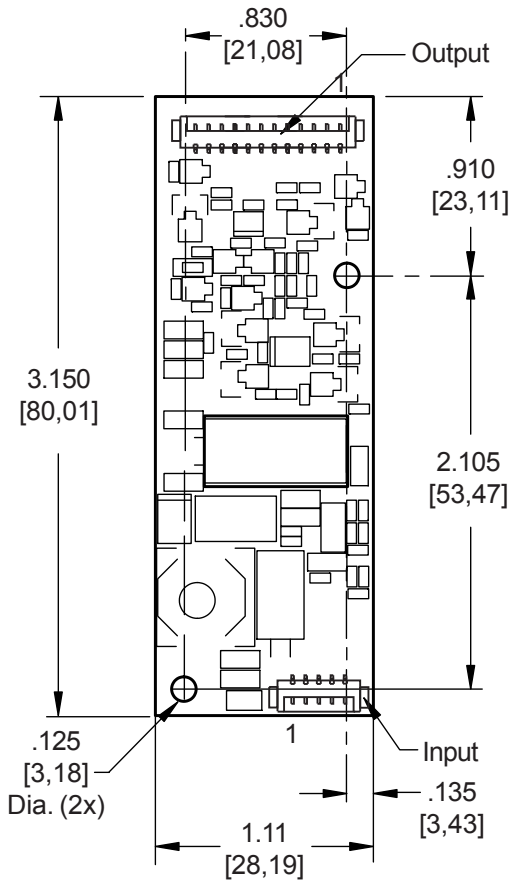

PCB components are shown for reference only. Actual product may differ from that shown.

Mass: 13 grams

Connectors

Input Connector	Output Connector *
Molex 53261-0571	Molex 53261-1271
J1-1 Vin(+) J1-2 Vin(+) J1-3 GND J1-4 GND J1-5 Enable	J2-1 Cathode 3 J2-7 (do not use) J2-2 Anode 3 J2-8 (do not use) J2-3 (do not use) J2-9 Cathode 1 J2-4 (do not use) J2-10 Anode 1 J2-5 Cathode 2 J2-11 (do not use) J2-6 Anode 2 J2-12 (do not use) * Requires harness: ERG part number H12206152 recommended

RoHS Compliant

Absolute Maximum Ratings

Rating	Symbol	Value	Units
Input Voltage Range	V_{in}	-0.3 to +20.0	Vdc
Storage Temperature	T_{stg}	-40 to +85	°C
Enable Input Voltage	V_{Enable}	0 to Vin	Vdc

Operating Characteristics

Unless otherwise noted Vin = 12.00 Volts dc and Ta = 25°C.

Characteristic	Symbol	Min	Typ	Max	Units
Input Voltage	V_{in}	+10.0	+12.0	+18.0	Vdc
Component Surface Temperature (Note 1)	T_s	-40	-	+80	°C
Input Current	I_{in}	0.71	0.84	0.97	Adc
Peak Inrush Current (Note 2)	I_{peak}	-	1.5	-	Adc
LED String Voltage	V_{LED}	26.0	28.8	32.5	Vdc
Efficiency	η	-	70	-	%
Output Current (per string)	I_{out}	77	81	85	mAdc
Enable Pin (Note 3)					
Turn-on Threshold	V_{thon}	-	-	2.0	Vdc
Turn-off Threshold	V_{thoff}	0.8	-	-	Vdc
Enable Input Impedance (Note 4)	R_{Enable}	-	5	-	kOhms

Specifications subject to change without notice.

Note 1 Surface temperature must not exceed 80°C. SOT89 package to be at or below 110°C. SOT89 package is 90°C at 25°C ambient temperature.

Note 2 Peak inrush occurs over a 1 to 3 ms time period, during initial startup.

Note 3 The input voltage to the driver must be within its operating characteristic before the driver is enabled, otherwise the driver may not start or may shut down unexpectedly.

Note 4 Input impedance is 5.0 kOhms to GND.

Application Information

The ERG SFDEB3995F has been designed to be configured in multiple ways:

NO DIMMING

- OPERATION: The SFD driver can be configured to operate without dimming by pulling up the Enable Pin (J1-5).
- Pins 1 and 2 of connector J1 must be connected to +Vin, between 10 and 18 Vdc. Pins 3 and 4 of connector J1 must be connected to GND.

EXTERNAL PWM DIMMING

- OPERATION: External PWM configuration as shown in Figure 1 allows the user to control display brightness with an externally generated PWM signal. The user is responsible to provide the PWM signal. A dimming ratio up to 5000:1 at ≤ 200 Hz is possible with this configuration.
- DIMMING: Dimming is accomplished by applying a PWM signal to the Enable Pin (J1-5). PWM on and off levels are specified in the Operating Characteristics section of the data sheet. Display brightness is modulated by controlling the PWM duty cycle as shown in Graph 1.
- Pins 1 and 2 of connector J1 must be connected to +Vin, between 10 and 18 Vdc. Pins 3 and 4 of connector J1 must be connected to GND.

EXTERNAL PWM DIMMING

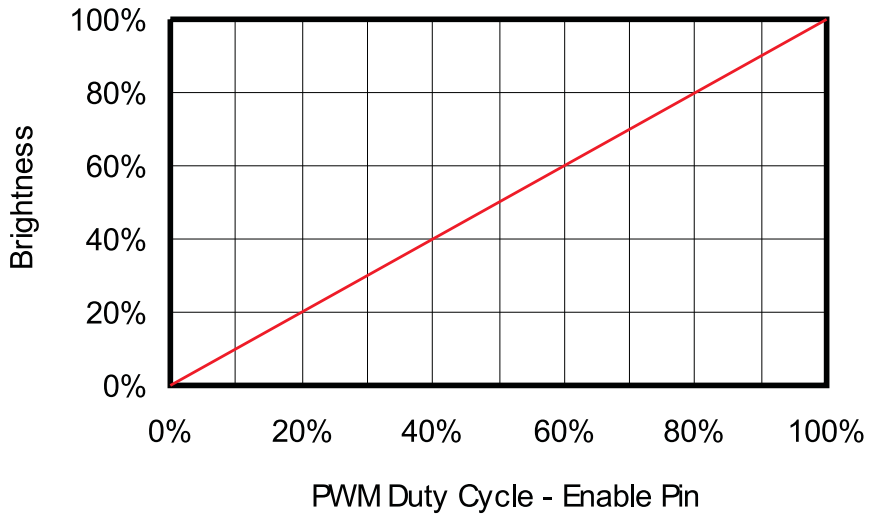

Graph 1

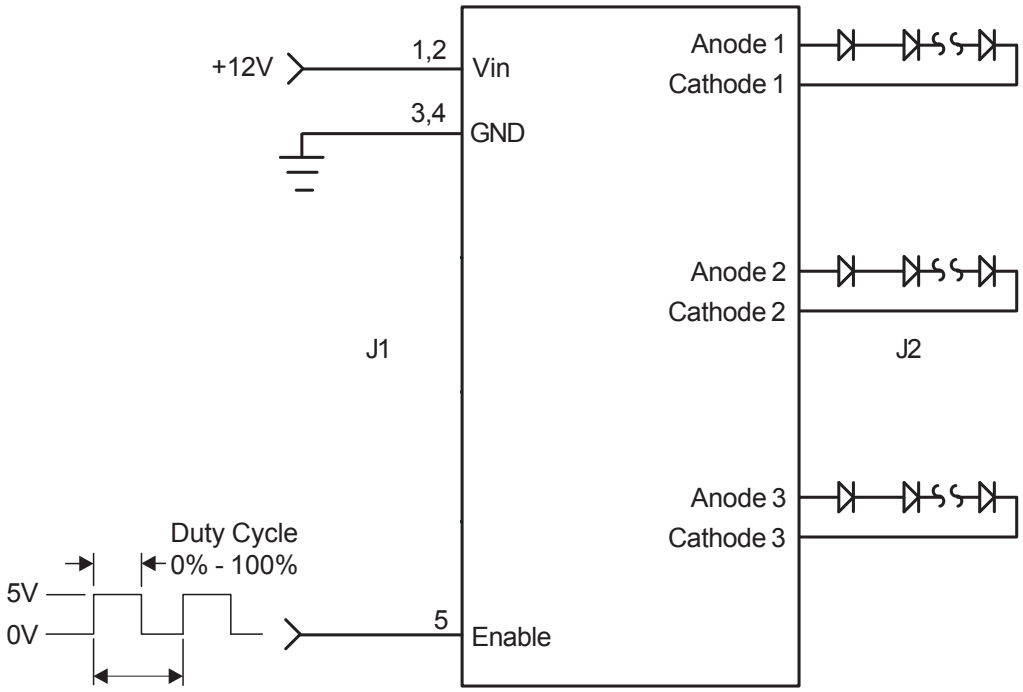

Figure 1

Endicott Research Group, Inc. (ERG) reserves the right to make changes in circuit design and/or specifications at any time without notice. Accordingly, the reader is cautioned to verify that data sheets are current before placing orders. Information furnished by ERG is believed to be accurate and reliable. However, no responsibility is assumed by ERG for its use.